Rbo

锐意进取

苏州瑞博机电有限公司

Rui Bo (Suzhou) Machinery&Electronics Co.,Ltd

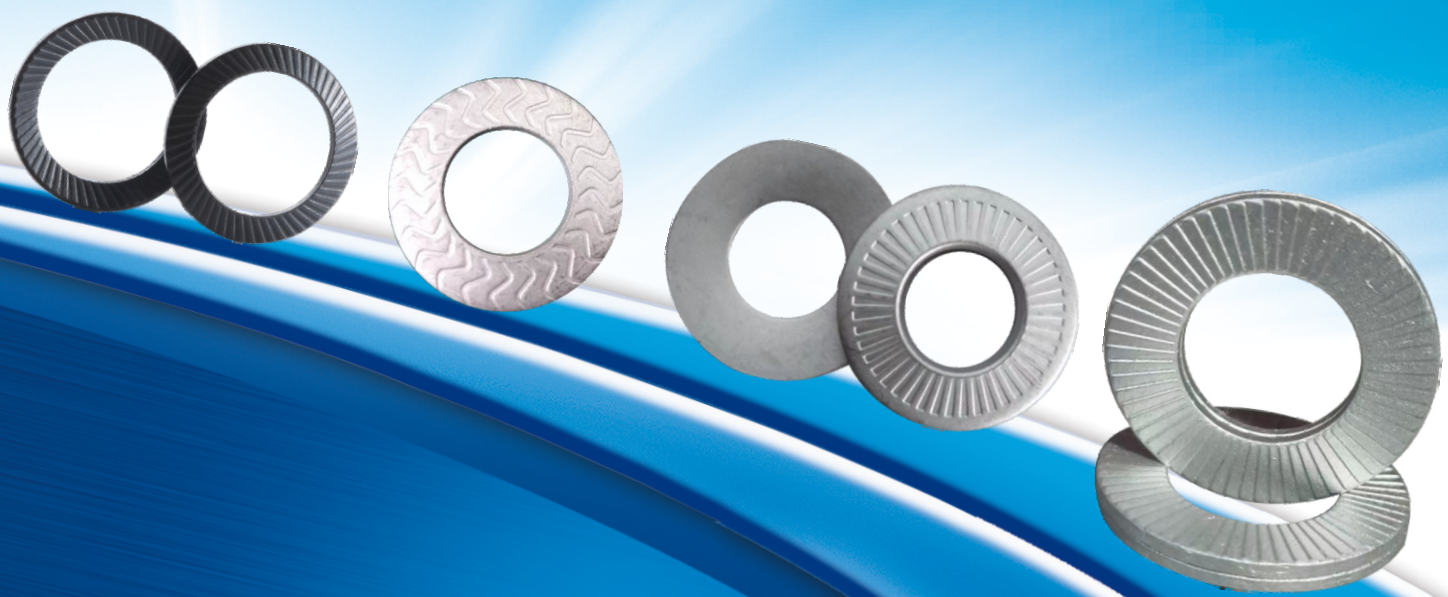

SECURE AND RELIABLE LOCKING

安 全 可 靠 的 锁 紧

TO BUILD THE BRAND IN ONE HUNDRED WE TRUSTED

打 造 百 年 品 牌　我 们 值 得 信 赖

苏州瑞博机电有限公司
Rui Bo(Suzhou) Machinery&Electronics Co.,Ltd.
锐意进取

目录/Catalogue

企业简介Company profile 02
我们的客户Our customer 03
生产设备/仓储Production equipment/warehousing 04
商标/认证资质Trademark/Qualifications certificate 05
检测设备Testing equipment 06-07
应用领域Applicationare 08-10
DIN25201 双叠自锁垫圈 11-12
DIN25201 双叠自锁垫圈性能对比 13-14
DIN25201 双叠自锁垫圈工作原理 15
DIN25201 双叠自锁垫圈操作规范 16
DIN25201 双叠自锁垫圈扭矩参考 17-18
NFE25-511 单面齿法式垫圈 19
NFE25-511 单面齿闪电纹垫圈 20
SN70093 六爪接地垫圈 21
DIN9250 双面齿安全垫圈 22
DIN6796 碟形弹簧重载垫圈 23
DIN6798A外锯齿锁紧垫圈 24
DIN6797J 内齿锁紧垫圈 25
非标件定制Non-standard parts customization 26

企业简介/Company profile

苏州瑞博机电有限公司自2005年成立，是一家独立设计、研发中高端防松垫圈“盖洛克”的制造商，致力于国内外铁路、风电、减速机、船舶、电梯、工程机械、自动化，汽车，光伏、传动等行业领域；先后通过ISO9001认证、IATF16949认证等相关认证；

"盖洛克"防松垫片（支持客户指定材料和镀层）

材质：65Mn、SK5、S60C、C67S、27MnCrB5（EN1.7182）、SUS304、316L(EN1.4404)不锈钢等冷轧带料和板材；

镀层：环保蓝白锌、彩锌、机械镀锌、达克罗、久美特、磷化等不同表面处理，现货库存满足了市场的不同客户配套需求；

公司自动化生产，检测仪器配备有横向振动测试机、二次元影相仪、涡流光学筛选机、电脑拉力机、金相分析仪、盐雾试验机，轮廓仪、洛氏和维氏硬度计等专业检测设备，能够满足各项数据和测试要求、达到严控生产工艺，确保产品品质的稳定性和一致性；

盖洛克垫圈是目前全球紧固件领域应用卓越有效的防松方式！

Suzhou Ruibo Electromechanical Co., Ltd. was established in 2005, and is an independent manufacturer of high-end anti loosening gaskets "Grains Lock" designed, developed, and manufactured. We are committed toIn industries such as railways, wind power, reducers, elevators, construction machinery, automation, automobiles, photovoltaics, and transmission both domestically and internationally; Has successively passed ISO9001 certification, IATF16949 certification and other related certifications;

Grains Lock" anti loosening gasket (supports customer specified materials and coatings)

Material: Cold rolled strip and sheet materials such as 65Mn, SK5, S60C, C67S, 27MnCrB5 (EN1.7182), SUS304, 316L (EN1.4404) stainless steel, etc;

Coating: Different surface treatments such as environmentally friendly blue and white zinc, color zinc, mechanical galvanizing, Dacromet, Jiumete, phosphating, etc., with spot inventory to meet the matching needs of different customers in the market;

Automatic production of the company, testing instruments are equipped with transverse vibration testing machine, anime imaging instrument, eddy current optical screening machine, computer tensile machine, metallographic analysisProfessional testing equipment such as instruments, salt spray testers, profilometers, Rockwell and Vickers hardness testers can meet various data and testing requirements, achieve strict control of production processes, and ensure the stability and consistency of product quality!

Grains Lock" is currently an excellent and effective anti loosening method in the global fastener industry!

瑞博优势/ADVANTAGE

专业生产
Professional Production

品质保证
Quality Assurance

交货便捷
Easy Delivery

我们的客户/Our customer

我们的产品服务于国内外高端客户，产品配套中国中车集团（CRRC）,中国铁建集团(CRCC)，伍尔特（Würth），柏中（Bossard），施耐德电气（Schneider Electric），松下电器(Panasonic)，三一重工（SANY)，徐工集团(XCMG)，上汽集团（SAIC)，奥的斯（OTIS)，桥梁工程，轨道交通；以高品质赢得市场一致好评与信赖。

Our products serve high-end customers both domestically and internationally, and are compatible with China Railway Rolling Stock Corporation (CRRC), China Railway Construction Corporation (CRCC), W ü rth, Bossard, Schneider Electric, Panasonic, SANY, XCMG, SAIC, OTIS, bridge engineering, and rail transit; Winning unanimous praise and trust in the market with high quality.



生产设备/仓储
Production equipment/warehousing













商标/认证资质
Trademark/ Qualifications certificate













检测设备/Testing equipment

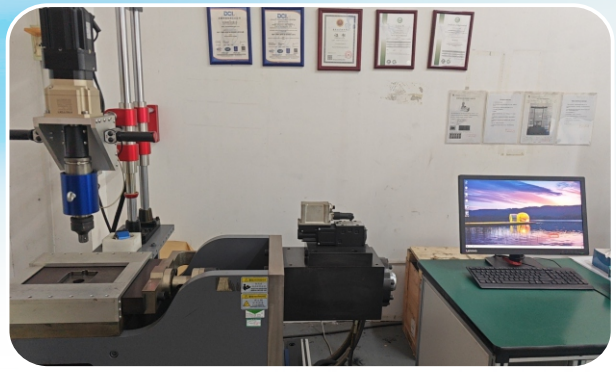

横向振动测试机
Transverse vibration tester



压力试验机
Pressure testing machine

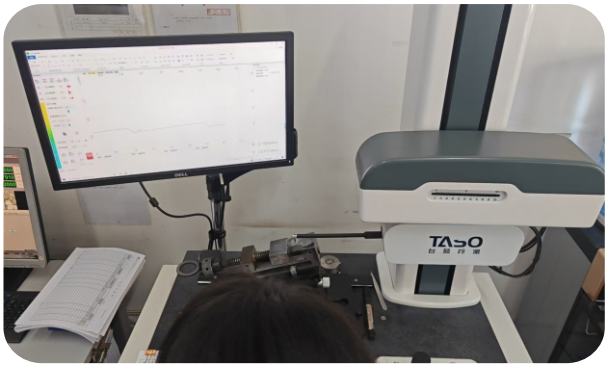

轮廓仪
Profiler

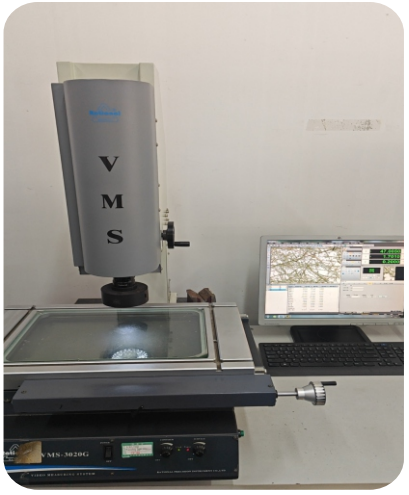

二次元
Two dimensions



维氏显微硬度计
Vickers microhardness tester

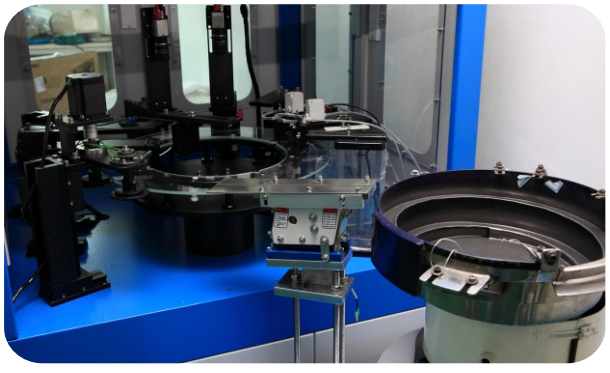

涡流光学筛选机
Vortex optical filter

检测设备/Testing equipment



金相分析仪
Metallographic analyzer

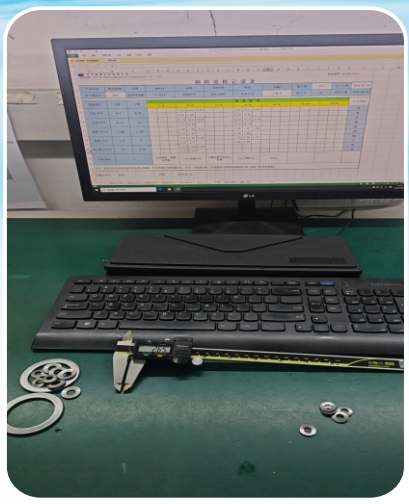

蓝牙智能卡尺
Bluetooth smart caliper



洛氏硬度计
Rockwell hardness tester

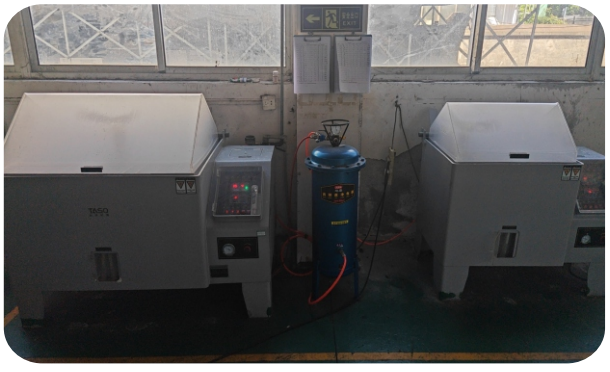

中性盐雾实验机
Neutral salt spray tester



金相试样镶嵌机
Metallographic embedding machine



金相试样抛磨机
Grinding machine for metallographic specimen

应用领域/APPLICATION ARE

轨道交通
RAIL TRANSIT



问题：
在安全的重要环境(如过山车)中，保护接头不开裂至关重要；开展远程维护和性能检查成本高，而且不便利。
盖洛克® 保障列车(过山车)运行中，紧固系统不松动，避免人员伤亡及维修成本增加。

Challenge:
In safety-critical environments such as roller-coasters, guaranteeingthat joints do not fail is paramount; performing extensive maintenanceand performance checks can be costly and inconvenient.
GRAINS LOCK® Guarantee Train (roller coaster) running, the fastening systemis not loose, to avoid casualties and increased maintenance costs.

风电
Wind power



问题：
在起风条件下，螺栓接头会经受严重的振动，导致远处和难以到达位置的接缝开裂。维修远处的接头成本高，而且具有危险性。
盖洛克®系列垫圈能承受起风条件下的振动，减少成本和危险维修的需求。

Challenge:
Due to windy conditions, bolted joints in these applications canexperience severe vibration, causing joint failure in remote, hard-to.reach locations.Getting maintenance resources to remote locationsto fixjoints can be costly and dangerous.
GRAINS LOCK® Washers withstand vibration due to windy conditións,eliminating the need for costly and dangerous repairs.

应用领域/APPLICATION ARE

矿山机械
Mining machinery



问题：

在恶劣的作业环境中，设备经受严重的振动，接头可能会开裂，导致远方昂贵的设备停止运转。

盖洛克®系列垫圈采用经证明的楔形锁紧技术，保护巨大的振动下的接头，而且能消除停机情况的发生。

Challenge:

In this harsh work environment, where equipment is subjected to extremevibration,joints can fail.causing costlyequipment downtime in remote locations.

GRAINS LOCK®Washers' proven wedge locking technplogy protectsjoints under severe vibration, and can eliminate machine downtime.

新能源汽车的制造与应用
Newenergy vehicle manufacturing andapplication



问题：

为保护车辆行驶的安全性，保护连接头不松动是至关重要的。

盖洛克®系列垫圈已经通过震动测试，不仅可以简化装配工序还可以在振动中保护接头。

Challenge:

In order to protect the safety of the vehicle, it is crucial to protect theconnector from being loose.

GRAINS LOCK® Washers have been tested by vibration, which cannot only simplify the assembly process but also protect thejointsduring vibration.

应用领域/APPLICATION ARE

油气
Gas & Oil



问题：
保持重要和艰苦操作环境(如石油钻塔)中的接头安全具有危险性，而且接头往往位于难以到达的地方。
盖洛克®系列垫圈能承受艰苦的操作环境，在无需替换或远程维修的情况下能够保持接头安全。

Challenge:
Keeping joints secure in safety critical and harsh operating environmentssuch as oil rigs can be dangerous, and joints are often found in hard-to-reachlocations.
GRAINS LOCK® Washers are created to withstand harsh operatingenvironments,and will keepjoints secure without needingreplacements orextensivemaintenance.

农业机械与建筑设备
Agricultural machinery & Construction equipment



问题：
接头掉下时，现场校正维护的开展，通常要求拆卸和重新组装复杂机器，具有一定难度，而且很耗时。
盖洛克®系列垫圈能承受农合和建筑设备带来的振动和负载，而且好保护接头安全。

Challenge:
When joints fail, performing corrective maintenance in thefield-often requiring disassembling and reassembling complex machinery-is difficult and time consuming.
GRAINS LOCK® Washers withstand the vibration and load associated withthe agriculture and construction conditions, and hold joints secure.

盖洛克® 双叠自锁垫圈 规格表
DIN25201:Grains Lock Washer

材质：SK5、S60C、27MnCrB5(En1.7182)
表面处理: 环保达克罗、久美特、德尔塔等涂层处理
Zincflake coated、Geomet、Delta

规格	公制型号	美制型号	内径 Φi	外径 Φo	厚度 T	千只重 kg/1000pcs
GL3	M3	#5	3.4	7	1.8	0.3
GL3. 5	M3. 5	#6	3.9	7.6	1.8	0.4
GL3. 5sp	M3.5	#6		9	1.8	0.6
GL4	M4	#8	4.4	7.6	1.8	0.4
GL4sp	M4	#8		9	1.8	0.6
GL5	M5	#10	5.4	9	1.8	0.5
GL5sp	M5	#10		10.8	1.8	1.1
GL6	M6		6.5	10.8	1.8	0.7
GL6sp	M6			13.5	2.5	2
GL1/4"		1/4″	7.2	11.5	2.5	0.8
GL1/4sp		1/4"		13.5	2.5	1.8
GL8	M8	5/16"	8.7	13.5	2.5	1.5
GL8sp	M8	5/16"		16.6	2.5	2.8
GL3/8"		3/8"	10.3	16.6	2.5	2.3
GL3/8sp		3/8"		21	2.5	4.8
GL10	M10		10.7	16.6	2.5	2.2
GL10sp	M10			21	2.5	4.7
GL11	M11	7/16"	11.4	18.5	2.5	2.9
GL12	M12		13	19.5	2.5	2.9
GL12sp	M12			25.4	3.4	9.3
GL1/2"		1/2"	13.5	19.5	2.5	2.7
GL1/2"sp		1/2"		25.4	3.4	9
GL14	M14	9/16"	15.2	23	3.4	5.6
GL14sp"	M14	9/16"		30.7	3.4	14.1
GL16	M16	5/8"	17	25.4	3.4	6.7
GL16sp"	M16	5/8"		30.7	3.4	12.8
GL18	M18		19.5	29	3.4	8.9
GL18sp"	M18			34.5	3.4	15.8
GL3/4		3/4"	20	30.7	3.4	10.5
GL3/4sp		3/4"		39	3.4	22.1
GL20	M20		21.4	30.7	3.4	9.3
GL20sp	M20			39	3.4	20.9
GL22	M22	7/8"	23.4	34.5	3.4	12.5
GL22sp	M22	7/8"		42	4.6	31.9
GL24	M24		25.3	39	3.4	17.4
GL24sp	M24			48.5	4.6	45.1
GL1"		1"	27.9	39	3.4	15.3
GL1"sp		1"		48.5	4.6	42
GL27	M27		28.4	42	5.8	31.4
GL27sp	M27			48.5	5.8	52.7
GL30	M30	11/8"	31.4	47	5.8	41
GL30sp	M30	11/8"		55	5.8	70
GL33	M33	11/4"	34.4	48.5	5.8	38.9
GL33sp	M33	11/4"		58.5	5.8	80
GL36	M36	13/8"	37.4	55	5.8	54.9
GL36sp	M36	13/8"		63	5.8	85.8
GL39	M39	11/2"	40.4	58.5	5.8	58.9
GL42	M42		43.2	63	5.8	79.7
GL45	M45	13/4"	46.2	70	7	102
GL48	M48		49.6	75	7	120
GL52	M52	2"	53.6	80	7	130
GL56	M56	21/4"	59.1	85	7	135
GL60	M60		63.1	90	7	152
GL64	M64	21/2"	67.1	95	7	167
GL68	M68		71.1	100	9.5	282
GL72	M72		75.1	105	9.5	307
GL76	M76	3"	79.1	110	9.5	333
GL80	M80		83.1	115	9.5	360
GL85	M85		88.1	120	9.5	378
GL90	M90		92.4	130	9.5	477
GL95	M95		97.4	135	9.5	498
GL100	M100		103.4	145	9.5	589
GL105	M105		108.4	150	9.5	613
GL110	M110		113.4	155	9.5	635
GL115	M115		118.4	165	9.5	753
GL120	M120		123.4	170	9.5	779
GL125	M125		128.4	173	9.5	766
GL130	M130		133.4	178	9.5	792



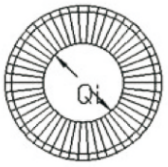

GL3–GL8sp
Øi±0.1 mm

GL3/8"–GL42
Øi±0.2 mm

GL45–GL130
Øi+0.5 / -0.0 mm



GL3–GL1"sp
Øo±0.2 mm

GL27–GL42
Øo±0.3 mm

GL45–GL130
Øo+0.0 / -2.0 mm

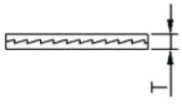

GL3–GL42
T±0.25 mm

GL45–GL130
T±0.75 mm

盖洛克® 双叠自锁垫圈 规格表
DIN25201:Grains Lock Washer

材质: SUS304、316L(En1.4404)
表面处理:不锈钢本色、表面加硬>520HV
Stainless steel color, surface hardening >520HV

规格	公制型号	美制型号	内径 Φi	外径 Φo	厚度 T	千只重 kg/1000pcs
Gl3ss	M3	#5	3.4	7	2.2	0.4
GL3.5ss	M3.5	#6	3.9	7.6	2.2	0.4
GL3.5spss	M3.5	#6		9	2.2	0.7
GL4ss	M4	#8	4.4	7.6	2.2	0.4
GL4spss	M4	#8	.	9	2.2	0.7
GL5ss	M5	#10	5.4	9	2.2	0.6
GL5spss	M5	#10		10.8	2.2	1.1
GL6ss	M6		6.5	10.8	2.2	0.9
GL6spss	M6			13.5	2.1	1.6
GL1/4"ss		1/4"	7.2	11.5	2.2	0.9
GL1/4spss		1/4"		13.5	2.2	1.5
GL8ss	M8	5/16"	8.7	13.5	2	1.2
GL8spss	M8	5/16"		16.6	2.2	2.3
GL3/8"ss		3/8"	10.3	16.6	2	1.9
GL3/8spss		3/8"		21	2	3.8
GL10ss	M10		10.7	16.6	2	1.8
GL10spss	M10			21	2.3	3.7
GL11ss	M11	7/16"	11.4	18.5	2.2	2.6
GL12ss	M12		13	19.5	2.1	2.3
GL12spss	M12			25.4	3	8.2
GL1/2"ss		1/2"	13.5	19.5	2	2.2
GL1/2"spss		1/2"		25.4	3.2	8
GL14ss	M14	9/16"	15.2	23	3	4.9
GL14spss	M14	9/16"		30.7	3.2	13.1
GL16ss	M16	5/8"	17	25.4	3	5.9
GL16spss	M16	5/8"		30.7	3.2	11.3
GL18ss	M18		19.5	29	3.2	8
GL18spss	M18			34.5	3.2	15.6
GL3/4"ss		3/4"	20	30.7	3.2	9.6
GL3/4spss		3/4"		39	3.2	21
GL20ss	M20		21.4	30.7	3	8.2
GL20spss	M20			39	3.2	20.6
GL22ss	M22	7/8"	23.4	34.5	3.2	12.3
GL22spss	M22	7/8"		42	3.2	22.2
GL24ss	M24		25.3	39	3.2	15.9
GL24spss	M24			48.5	4.5	44.7
GL1"ss		1"	27.9	39	3.2	14.2
GL1spss		1"		48.5	3.2	27.9
GL27ss	M27		28.4	42	6.8	34.5
GL27spss	M27			48.5	6.8	53.4
GL30ss	M30	11/8"	31.4	47	6.8	44.9
GL30spss	M30	11/8"		58.5	6.8	91.8
GL33ss	M33	11/4"	34.4	48.5	6.8	42.8
GL36ss	M36	13/8"	37.4	55	6.8	59.6
GL39ss	M39	11/2"	40.4	58.5	6.8	67.4
GL42ss	M42		43.2	63	6.8	75
GL45ss	M45	13/4"	46.2	70	6.8	102
GL48ss	M48		49.6	75	6.8	120
GL52ss	M52	2"	53.6	80	9	180.4
GL56ss	M56	21/4"	59.1	85	9	213
GL60ss	M60		63.1	90	9	235
GL64ss	M64	21/2"	67.1	95	9	258
GL68ss	M68		71.1	100	9	282
GL72ss	M72		75.1	105	9	307
GL76ss	M76	3"	79.1	110	9	333
GL80ss	M80		83.1	115	9	360



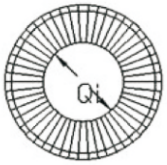

GL3ss–GL8spss
Øi±0.1 mm

GL3/8"ss–GL42ss
Øi±0.2 mm

GL45ss–GL80ss
Øi+0.5 / -0.0 mm



GL3ss–GL1"spss
Øo±0.2 mm

GL27ss–GL42ss
Øo±0.3 mm

GL45ss–GL80ss
Øo+0.0 / -2.0 mm

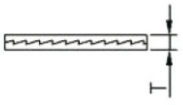

GL3ss–GL1"spss
T±0.25 mm

GL27ss–GL42ss
T+0.0 / -0.5 mm

GL45ss–GL80ss
T±0.75 mm

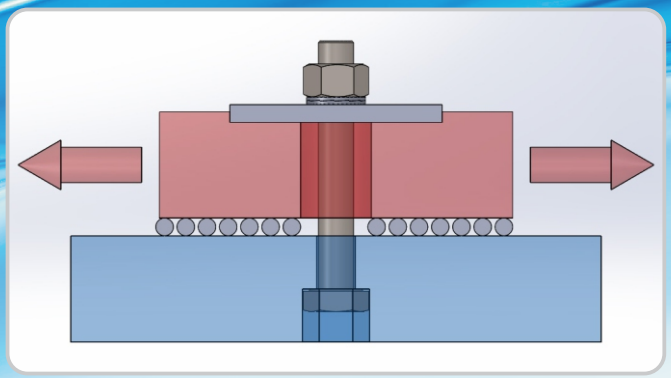

盖洛克®系列楔形锁紧垫圈已通过横向振动测试机的实验；振动测试执行DIN25201-4的检测标准，被认为是针对螺栓紧固最严格的振动测试；当因横向振动产生剪切载荷时，振动测试被用于确认螺栓紧固后原预载荷产生失效的那个点。

与其它产品一起执行DIN25201-4检测标准振动测试时，只有盖洛克垫圈保持了安全性、而其它产品均发生了严重的松动！

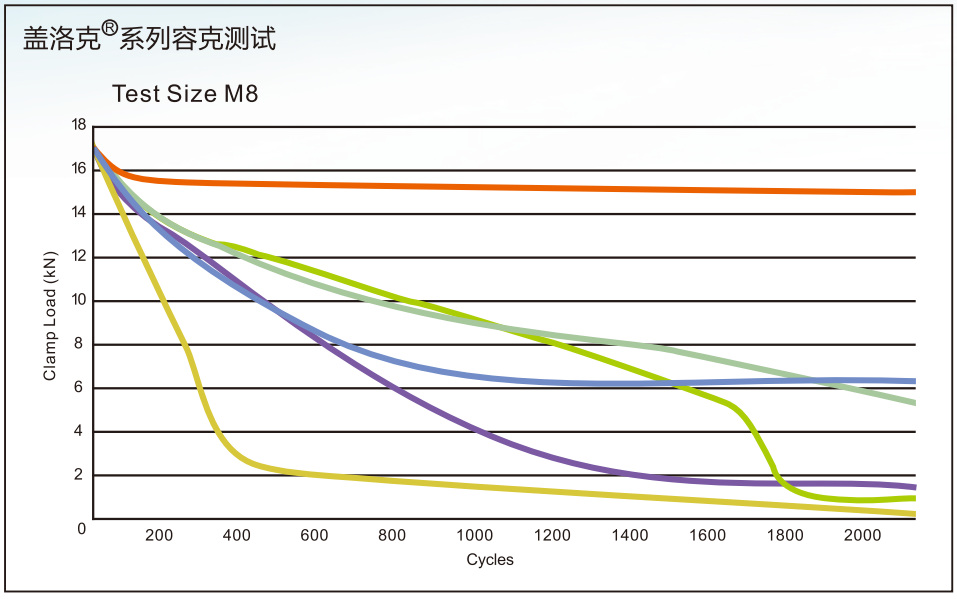

*盖洛克®系列垫圈
*开口锁紧垫圈
*尼龙螺母
*全金属自锁螺母
*六角螺母，无垫圈
*六角螺母，平垫圈

所有上述选项都采用1.0NM振幅，在12.5Hz的频率上进行了2000次循环测试。

扭矩测试结果
盖洛克®系列钢M10垫圈

		螺距 (MM)	扭矩 (Nm)	夹紧力 (kN)
M10 8.8 级螺栓 电镀锌	润滑	1.5	52	27.0
	干燥	1.5	52	19.8
M10 10.9 级螺栓 电镀锌	润滑	1.5	66	38.5
	干燥	1.5	66	28.8
M10 10.9 级螺栓 机械镀锌	润滑	1.5	77	38.5
	干燥	1.5	77	36.7

扭矩指南

紧固连接是为了维持夹紧力。表格左列强调了润滑对获得所需夹紧力所起到的作用。

针对润滑后的测试条件，螺栓表面被涂上了Molykote® 1000涂层。依据ISO 898-1, 8.8级和10.9级螺栓扭矩数据都是基于在保证载荷的80%达到夹紧力时得出。
正如前者的测试一样，对照的8.8级和10.9级螺栓被固定为相同的扭矩，连接处无润滑。
还测试了带有机械电镀锌层的10.9级螺栓（有或没有润滑），在规定的安装扭矩上验证了不同涂层产生的效果。

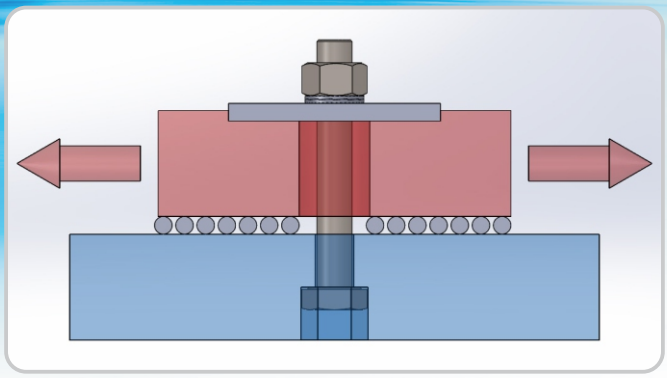

The Grains Lock Washers series wedge lock washers have passed the lateral vibration testing machine experiment; The vibration test follows the testing standard DIN25201-4 and is considered the most rigorous vibration test for bolt tightening;The vibration test follows the testing standard DIN25201-4 and is considered the most rigorous vibration test for bolt tightening;

When performing the DIN25201-4 vibration test with other products, only Grains Lock Washers maintained safety, while other products experienced severe loosening!

GRAINS LOCK® JUNKER TEST

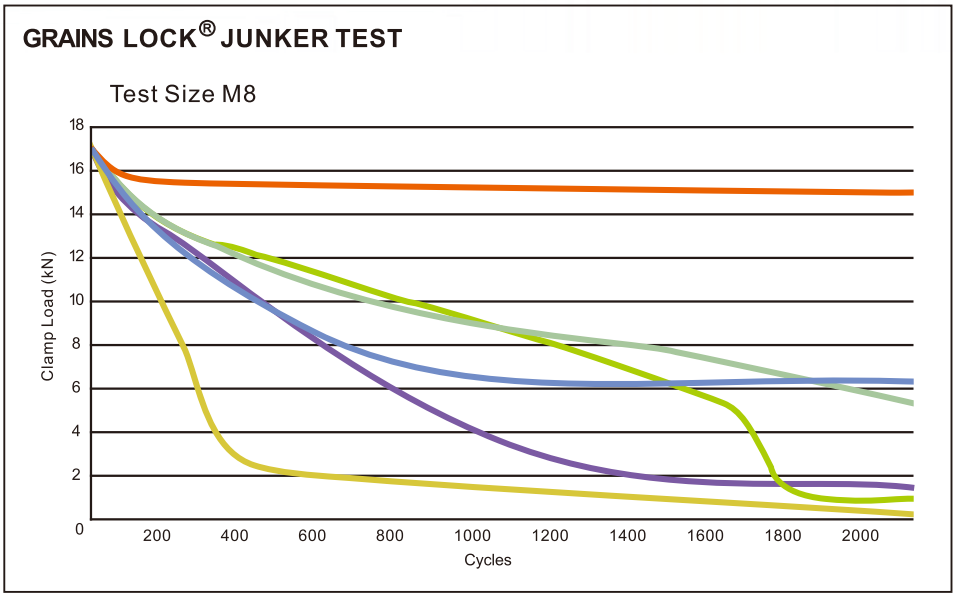

* GRAINS LOCK® Washer
* Split Lock Washer
* Nylon Insert Nut
* Mechanical Lock Nut
* Hex Nut, No Washer
* Hex Nut, Flat Washer

All options were tested with 1.0 MM amplitude at 12.5 Hz for 2000 cycles

TORQUE TEST RESULTS
GRAINS LOCK® STEEL M10 WASHERS

		PITCH (MM)	TORQUE (Nm)	CLAMP LOAD(kN)
M10 Class 8.8 Bolt Zinc Plated	Lubricated	1.5	52	27.0
	Dry	1.5	52	19.8
M10 Class 10.9Bolt Zinc Plated	Lubricated	1.5	66	38.5
	Dry	1.5	66	28.8
M10 Class 10.9Bolt Zinc Flake	Lubricated	1.5	77	38.5
	Dry	1.5	77	36.7

TORQUE GUIDELINES

The goal of a fastened joint is to maintain clamp load. The chart to the left highlights the effects of lubrication on achieving desired clamp load.

For the lubricated test conditions, bolts were coated with Molykote® 1000. Torque data is based on achieving clamp loads at 80% of proof load for both Class 8.8 and Class 10.9 bolts, according to ISO 898-1.

Corresponding Class 8.8 and 10.9 bolts were tightened to the same torque as the previous test, with lubrication omitted from the joint.

Class 10.9 bolts with zinc flake coating were also tested, with and without lubrication, to demonstrate the effect of coating on required installation torque.

盖洛克® 双叠自锁垫圈原理
Working principle of GRAINS LOCK double disc selflocking washer

德标DIN25201双叠自锁垫圈利用独特的契形结构改变了传统依靠摩擦力的防松方式。由两片相同的垫圈组成一套，每片的上、下面带有不同锯齿，一面为凸轮状大齿，其斜坡角度α大于螺栓螺纹角β，另一面为较密小齿。垫圈安装时，要大齿面相对，成对安装；小齿面分别与螺母和被紧固件接触；拧紧螺栓连接紧固件后，振动发生时，大齿面会错动抬升，并由α角大于β角的原理来锁住螺栓，使之不能松动，具有楔入制锁功能。

它提供了一种不会受任何振动或动力负载影响的螺栓安全锁紧系统。此款防松垫圈具有高安全性能、防止由于振动和动力负载引起的松动、安装拆卸容易、锁紧效果不受润滑影响、无论预紧力高低都具有良好的锁紧效果、可以控制预紧力的高低、具有与标准螺栓/螺母相同的温度特性、可重复使用。

The German standard DIN25201 double layered self-locking washer utilizes aunique wedge-shaped structure to change the traditional anti loosening methodthat relies on friction. A set consisting of two identical washers, eachThere are different serrations on the top and bottom of the sheet, and one side isa cam shaped large tooth with a slope angle a Greater than bolt thread angle BThe other side has dense small teeth. When installing the gasket, it should havelarge teeth-ace to face. insta led in pairs. The small tooth surface is in contact with the nutand the fastener respectively. After tightening the bolted fasteners, when vibratioroccurs, the large tooth surface will move and lift up in a staggered manner, and ahorngreater than B The principle of angle is used to lock the bolt and prevent it fromloosening. with the function of wedge locking.

It provides a bolt safety locking system that is not affected by any vibration ordynamic loads. This lock washer has high safety performance and preventsvibration and vibrationLooseness caused by force load, easy installation and disassembly. locking effectnot affected by lubrication, good locking effect regardless of pre tightening force,and control of high pre tightening forceLow, has the same temperature characteristics as standard bolts/nuts, and can bereused.

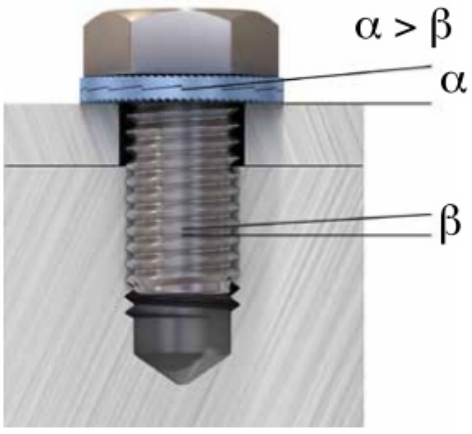

符合DIN25201标准

双叠自锁垫圈材质 Double stack self-locking washer material	范围 Radius	硬度 Hardness
SK5、27MnCrB5(EN1.7182)	GL3-GL130(大外径用“SP”表示)	>47-50HRC
SUS304、316L（EN1.4404）	GL3SS-GL80ss(大外径用“SP”表示)	>520HV0.05
备注：特殊材质可以根据客户要求生产加工 Note: special material can be produced according to customer requirements		

盖洛克不适用以下情况 GRAINS LOCK does not apply to the following

① 垫圈和基材不能有效接触
1. washer and substrate can not effectively contact

② 配合面硬度比垫圈高
1. The mating surface is harder than the washer

③ 极端凹陷的地方
3. Extreme depressions

④ 无预紧的连接件
4. No pre-tight connector

安装示意图 Installation schematic

盖洛克系列楔形锁定垫圈可用于以下各种螺栓的接头完整性；
The GRAINS LOCK series wedge-shaped lock washers can be used for theintegrity of the joints of various bolts as follows;

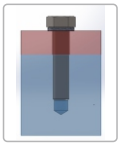

螺纹孔件 Threaded hole piece

- 有效紧固螺栓头于配合件表面。
  Effectively fasten the bolt head to the surface of the fitting.

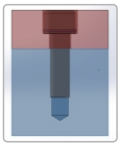

埋头孔件 Burying head hole piece

- 当使用在埋头孔件时盖洛克系列垫圈的设计正可安置在承窝头产品头下。
  When used in countersunk parts, the design of the Gallock series gasket can beplaced under the head of the socket head product.

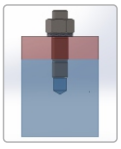

双头螺栓 Double head bolts

- 稳定地将螺母和双头螺栓紧固，减少粘合剂的需求。
  Secure the nuts and studs securely, reducing the need for adhesives.

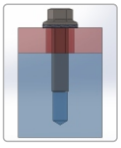

槽孔或大孔 A grooved or large hole

- 盖洛克宽边系列垫圈适合在法兰螺栓和螺母下使用，全面提高在大孔或槽孔和较软的配合面的夹紧力。
  The GRAINS LOCK wide edge series washers are suitable for use under flangebolts and nuts, comprehensively improving the clamping force on large or slottedholes and softer mating surfaces.

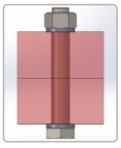

全通孔 Full bore

- 全通孔要求在螺栓头和螺母下使用盖洛克系列垫圈，以维持连接安全。
  Full through holes require the use of GRAINS LOCK series washers under boltheads and nuts to maintain connection safety.

双叠自锁碳钢垫圈8.8级有镀层螺栓扭矩参考表

垫圈尺寸	螺栓尺寸	螺距 [mm]	油，G_F=75% μ_{th}=0.15,μ_h=0.17		Cu/C 膏*，G_F=75% μ_{th}=0.13,μ_h=0.17		干，G_F=62% μ_{th}=0.18,μ_h=0.18	
			扭距 [Nm]	夹紧力载荷 [KN]	扭距 [Nm]	夹紧力载荷 [KN]	扭距 [Nm]	夹紧力载荷 [KN]
GL3	M3	0.5	1.7	2.4	1.5	2.4	1.5	2.0
GL4	M4	0.7	3.8	4.2	3.6	4.2	3.5	3.5
GL5	M5	0.8	7.5	6.8	6.9	6.8	6.8	5.6
GL6	M6	1.0	13.1	9.7	12.1	9.7	11.9	8.0
GL8	M8	1.25	32	18	29	18	29	15
GL10	M10	1.5	62	28	57	28	56	23
GL12	M12	1.75	107	40	98	40	97	33
GL14	M14	2.0	170	55	157	55	155	46
GL16	M16	2.0	260	75	240	75	237	62
GL18	M18	2.5	364	92	336	92	331	76
GL20	M20	2.5	510	118	470	118	464	97
GL22	M22	2.5	696	146	642	146	635	120
GL24	M24	3.0	878	169	809	169	800	140
GL27	M27	3.0	1284	221	1183	221	1171	182
GL30	M30	3.5	1750	269	1613	269	1596	222
GL33	M33	3.5	2360	333	2173	333	2155	275
GL36	M36	4.0	3043	392	2803	392	2776	324
GL39	M39	4.0	3931	468	3619	468	3589	387
GL42	M42	4.5	4860	538	4476	538	4436	445

双叠自锁碳钢垫圈10.9级没有镀层螺栓扭矩参考表

垫圈尺寸	螺栓尺寸	螺距 [mm]	油，G_F=75% μ_{th}=0.15,μ_h=0.17		Cu/C 膏*，G_F=75% μ_{th}=0.13,μ_h=0.17	
			扭距 [Nm]	夹紧力载荷 [KN]	扭距 [Nm]	夹紧力载荷 [KN]
GL3	M3	0.5	2.0	3.2	2.0	3.4
GL4	M4	0.7	4.5	5.6	4.5	5.9
GL5	M5	0.8	8.9	9.1	8.9	9.6
GL6	M6	1.0	15.5	12.9	15.5	13.6
GL8	M8	1.25	37	23	37	25
GL10	M10	1.5	73	37	73	39
GL12	M12	1.75	126	54	126	57
GL14	M14	2.0	201	74	201	78
GL16	M16	2.0	307	100	306	106
GL18	M18	2.5	430	123	429	130
GL20	M20	2.5	602	156	600	165
GL22	M22	2.5	821	194	818	205
GL24	M24	3.0	1036	225	1034	238
GL27	M27	3.0	1514	294	1509	310
GL30	M30	3.5	2064	358	2058	378
GL33	M33	3.5	2783	443	2772	468
GL36	M36	4.0	3589	522	3576	551
GL39	M39	4.0	4632	624	4614	659
GL42	M42	4.5	5731	716	5709	757

Cu/C 膏*=铜/石墨膏（Molykote® 1000）
油=我们采用WD40
G_F=屈服率。当根据参考扭矩和无偏差紧固，这是实现的预紧力，并依屈服点的%率来表示。
μ_{th}=螺纹摩擦系数
μ_h=垫圈摩擦系数

双叠自锁碳钢垫圈12.9级没有镀层螺栓扭矩参考表

垫圈尺寸	螺栓尺寸	螺距 [mm]	油，G_F=75% μ_{th}=0.15,μ_h=0.17		Cu/C 膏*，G_F=75% μ_{th}=0.13,μ_h=0.17	
			扭距 [Nm]	夹紧力载荷 [KN]	扭距 [Nm]	夹紧力载荷 [KN]
GL3	M3	0.5	2.2	3.9	2.3	4.1
GL4	M4	0.7	5.1	6.7	5.3	7.1
GL5	M5	0.8	10.0	10.9	10.3	11.5
GL6	M6	1.0	17.4	15.4	18	16.3
GL8	M8	1.25	42	28	43	30
GL10	M10	1.5	82	44	85	47
GL12	M12	1.75	142	65	146	68
GL14	M14	2.0	226	89	233	94
GL16	M16	2.0	345	120	355	127
GL18	M18	2.5	483	148	498	156
GL20	M20	2.5	676	188	696	198
GL22	M22	2.5	921	233	948	246
GL24	M24	3.0	1165	270	1199	286
GL27	M27	3.0	1700	352	1749	372
GL30	M30	3.5	2318	430	2385	454
GL33	M33	3.5	3124	532	3213	562
GL36	M36	4.0	4029	626	4145	662
GL39	M39	4.0	5199	748	5346	790
GL42	M42	4.5	6434	860	6617	908

双叠自锁不锈钢垫圈和不锈钢螺栓扭矩参考表

垫圈尺寸	螺栓尺寸	螺距 [mm]	A2-50,A4-50 Cu/C 膏*，G_F=65% μ_{th}=0.13,μ_h=0.13		A2-70,A4-70 Cu/C 膏*，G_F=65% μ_{th}=0.13,μ_h=0.13		A2-80,A4-80 Cu/C 膏*，G_F=65% μ_{th}=0.13,μ_h=0.13	
			扭距 [Nm]	夹紧力载荷 [KN]	扭距 [Nm]	夹紧力载荷 [KN]	扭距 [Nm]	夹紧力载荷 [KN]
GL3ss	M3	0.5	0.4	0.7	0.8	1.5	1.1	2.0
GL4ss	M4	0.7	0.9	1.2	1.8	2.6	2.4	3.4
GL5ss	M5	0.8	1.7	1.9	3.6	4.1	4.8	5.5
GL6ss	M6	1.0	2.9	2.7	6.3	5.9	8.4	7.8
GL8ss	M8	1.25	7.0	5.0	15	11	20	14
GL10ss	M10	1.5	14	8	30	17	39	23
GL12ss	M12	1.75	24	12	51	25	68	33
GL14ss	M14	2.0	38	16	81	34	108	45
GL16ss	M16	2.0	58	21	124	46	165	61
GL18ss	M18	2.5	81	26	173	56	231	75
GL20ss	M20	2.5	113	33	242	72	323	95
GL22ss	M22	2.5	149	39	330	89	440	118
GL24ss	M24	3.0	195	48	418	103	557	137
GL27ss	M27	3.0	284	63	609	134	812	179
GL30ss	M30	3.5	388	77	831	164	1108	219
GL36ss	M36	4.0	674	111	1444	239	1925	319

Cu/C 膏*=铜/石墨膏（Molykote® 1000）
G_F=屈服率。当根据参考扭矩和无偏差紧固，这是实现的预紧力，并依屈服点的%率来表示。
μ_{th}=螺纹摩擦系数
μ_h=垫圈摩擦系数
1 N=0.225 lb
1 Nm=0.738 ft-lb

注：以上附表仅供参考，实际安装扭矩，需依据实际需求载荷进行计算。

NFE25-511 法式垫圈尺寸表
NFE25-511 French Standard Lock Washer

材质：65Mn、SUS304、316L
表面处理：发黑、镀锌、镀镍、达克罗等
Blackened, galvanized, nickel plated, dacromet

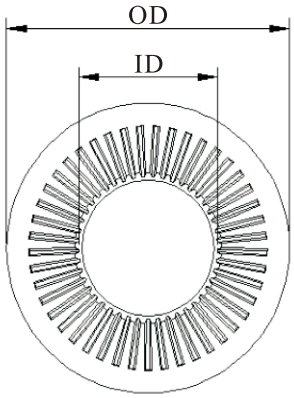

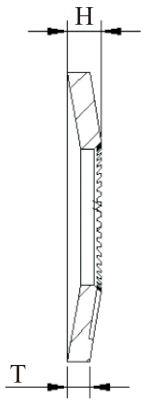



规格	ID		OD		T		H		千只重 kg/1000pcs
	max	min	公称	公差	公称	公差	max	min	
M3	3.35	3.1	6	±0.24	0.5	±0.03	0.9	0.7	0.08
			8	±0.29	0.6		1	0.8	0.2
			10	±0.29	0.6		1.2	0.95	0.33
M4	4.4	4.1	8	±0.29	0.8		1.2	1	0.23
			10	±0.29	0.9	±0.04	1.4	1.15	0.45
			14	±0.35	1		1.8	1.4	1.1
M5	5.4	5.1	10	±0.29	1		1.5	1.25	0.46
			12	±0.35	1.1		1.8	1.45	0.78
			16	±0.35	1.2		2.1	1.7	1.7
M6	6.4	6.1	12	±0.35	1.2		1.85	1.55	0.8
			14	±0.35	1.3		2.1	1.75	1.24
			18	±0.35	1.4		2.5	2.1	2.44
M8	8.58	8.2	16	±0.35	1.4		2.2	1.8	1.59
			18	±0.35	1.4		2.35	1.9	2.17
			22	±0.42	1.6	±0.05	2.7	2.2	4.05
M10	10.56	10.2	20	±0.42	1.6		2.6	2.1	2.86
			22	±0.42	1.6		2.75	2.25	3.86
			27	±0.42	1.8		3.1	2.6	6.85
M12	12.83	12.4	24	±0.42	1.8		2.9	2.4	4.76
			27	±0.42	1.8		3.1	2.6	6.29
			32	±0.5	2		3.6	3.1	10.6
M14	14.83	14.4	30	±0.42	2.4	±0.06	3.7	3.2	10.1
M16	16.83	16.4	32	±0.5	2.8		4.1	3.6	12.84
M20	21.02	20.05	40	±0.5	3.2		4.9	4.3	22.9

闪电纹单面齿尺寸表
Single Side Lightning Lock Washer

材质：65Mn、SUS304、316L
表面处理：发黑、镀锌、镀镍、达克罗等
Blackened, galvanized, nickel plated, dacromet

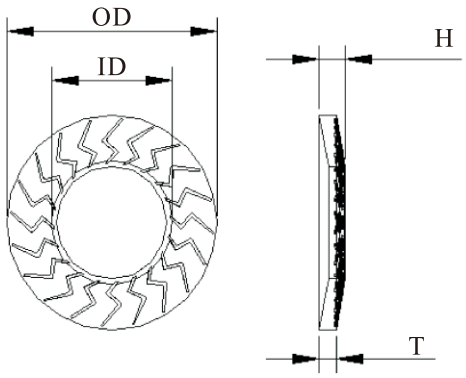



规格	ID		OD		T		H		千只重 kg/1000pcs
	max	min	公称	公差	公称	公差	max	min	
M3	3.35	3.1	6	±0.24	0.5	±0.03	0.9	0.7	0.08
			8	±0.29	0.6		1	0.8	0.2
			10	±0.29	0.6		1.2	0.95	0.33
M4	4.4	4.1	8	±0.29	0.8		1.2	1	0.23
			10	±0.29	0.9	±0.04	1.4	1.15	0.45
			14	±0.35	1		1.8	1.4	1.1
M5	5.4	5.1	10	±0.29	1		1.5	1.25	0.46
			12	±0.35	1.1		1.8	1.45	0.78
			16	±0.35	1.2		2.1	1.7	1.7
M6	6.4	6.1	12	±0.35	1.2		1.85	1.55	0.8
			14	±0.35	1.3		2.1	1.75	1.24
			18	±0.35	1.4		2.5	2.1	2.44
M8	8.58	8.2	16	±0.35	1.4		2.2	1.8	1.59
			18	±0.35	1.4		2.35	1.9	2.17
			22	±0.42	1.6	±0.05	2.7	2.2	4.05
M10	10.56	10.2	20	±0.42	1.6		2.6	2.1	2.86
			22	±0.42	1.6		2.75	2.25	3.86
			27	±0.42	1.8		3.1	2.6	6.85
M12	12.83	12.4	24	±0.42	1.8		2.9	2.4	4.76
			27	±0.42	1.8		3.1	2.6	6.29
			32	±0.5	2		3.6	3.1	10.6
M14	14.83	14.4	30	±0.42	2.4	±0.06	3.7	3.2	10.1
M16	16.83	16.4	32	±0.5	2.8		4.1	3.6	12.84
M20	21.02	20.05	40	±0.5	3.2		4.9	4.3	22.9

SN70093 接地垫圈尺寸表
SN70093 Contact Washer

材质：65Mn、SUS304、316L
表面处理：发黑、镀锌、镀镍、达克罗等
Blackened, galvanized, nickel plated, dacromet

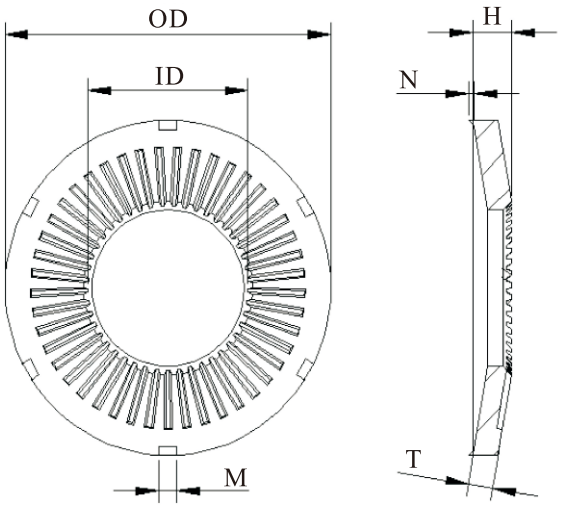



规格	ID		OD		T		M		N		H		千只重 kg/1000pcs
	尺寸	公差	尺寸	公差	尺寸	公差	尺寸	公差	尺寸	公差	尺寸	公差	
M3	3.1		6.2		0.6		0.8		0.2		0.95		0.083
M3.5	3.6		7.2		0.7		1		0.2		1.1		0.138
M4	4.1	+0.3	8.2	-0.4	0.8	±0.05	1.2		0.2	+0.2	1.15	-0.15	0.209
M5	5.4		10.2		1		2	±0.1	0.4		1.5	-0.25	0.76
M6	6.1		12.2		1.2		2		0.4		1.8		1.426
M8	8.2	+0.3	16.2	-0.4	1.4		2		0.4		2.4	-0.3	1.55
M10	10.2		20.25		1.6		2		0.4		2.6		2.78
M12	12.4		24.25	-0.5	1.6	±0.1	2		0.4	+0.3	2.6		3.97
M16	16.4	+0.4	32.3		2.5		4.5		0.4	-0.1	3.96		11.2
M20	20.5	+0.5	40.3	-0.6	3	±0.1	4.5	+0.2	0.4	+0.4	4.65	-0.45	20.8

DIN9250双面齿安全垫圈尺寸表
DIN9250 Double Side Teeth Washer

材质：65Mn、SUS304、316L
表面处理：发黑、镀锌、镀镍、达克罗等
Blackened, galvanized, nickel plated, dacromet

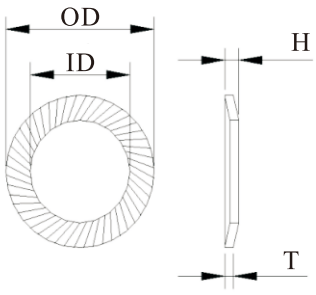

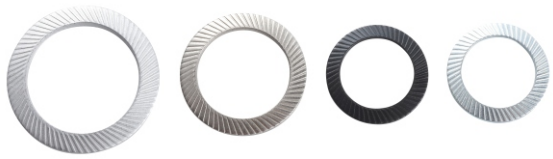

S-轻型

规格	内径 ID	外径 OD	厚度 T	自由高度 Hmin.	自由高度 Hmax.	千只重 kg/1000pcs
M2	2.2	4.0	0.35	0.40	0.6	0.021
M3	3.2	5.5	0.45	0.50	0.9	0.049
M4	4.3	7.0	0.50	0.55	1.0	0.085
M5	5.3	9.0	0.60	0.60	1.1	0.167
M6	6.4	10.0	0.60	0.70	1.2	0.2
M8	8.4	13.0	0.70	0.90	1.4	0.392
M10	10.5	16.0	0.90	1.10	1.6	0.75
M12	13	18.0	1.00	1.15	1.7	0.879
M14	15	22.0	1.10	1.35	2.0	1.641
M16	17	24.0	1.30	1.55	2.1	1.984
M18	19	27.0	1.40	1.75	2.3	2.97
M20	21	30	1.4	1.85	2.5	3.742
M22	23	33	1.4	1.95	2.7	4.507
M24	25.6	36	1.6	2.15	2.9	5.91
M27	28.6	39	1.8	2.35	3.1	7.369
M30	31.6	45	1.8	2.60	3.6	10.78
M36	38	54	2.5	3.20	4.2	21.28

VS-重型

M5	5.3	9	0.9	0.95	1.3	0. 273
M6	6.4	10	0.9	0.95	1.4	0. 3
M8	8.4	13	1.1	1.15	1.7	0. 615
M10	10.5	16	1.4	1.5	2.0	0. 167
M12	13	18	1.4	1.55	2.1	1. 223
M14	15	22	1.4	1.65	2.2	2. 089
M16	17	24	1.9	2.05	2.6	3. 142
M18	19	27	1.9	2.15	2.7	4. 041
M20	21	30	1.9	2.1	2.8	5. 62
M22	23	33	1.9	2.3	3.0	6. 117
M24	25.6	36	2.4	2.7	3.4	8. 865
M27	28.6	39	2.4	2.8	3.5	9. 731
M30	31.6	45	2.4	3.05	3.8	15. 73
M36	38	54	3.0	3.75	4.5	37.68

DIN6796 碟形垫圈尺寸表
DIN6796 Conical Lock Washer

材质：65Mn、SUS304、316L、C67S、51CrV4
表面处理：发黑、镀锌、镀镍、达克罗等
Blackened, galvanized, nickel plated, dacromet

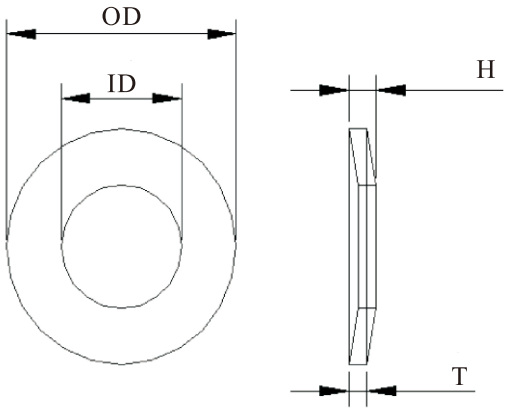



规格	内径 ID	外径 OD	厚度 T	H max	H min	千只重 kg/1000pcs
M2	2.2	5	0.4	0.6	0.5	0.05
M2.5	2.7	6	0.5	0.72	0.61	0.09
M3	3.2	7	0.6	0.85	0.72	0.14
M3.5	3.7	8	0.8	1.06	0.92	0.25
M4	4.3	9	1	1.3	1.12	0.38
M5	5.3	11	1.2	1.55	1.35	0.68
M6	6.4	14	1.5	2	1.7	1.42
M7	7.4	17	1.75	2.3	2	2.51
M8	8.4	18	2	2.6	2.24	3.1
M10	10.5	23	2.5	3.2	2.8	5.13
M12	13	29	3	3.95	3.43	12.35
M14	15	35	3.5	4.65	4.14	21.44
M16	17	39	4	5.25	4.58	30.19
M18	19	42	4.5	5.8	5.08	38.68
M20	21	45	5	6.4	5.6	48.52
M22	23	49	5.5	7.05	6.15	63.07
M24	25	56	6	7.75	6.77	92.3
M27	28	60	6.5	8.35	7.3	112.13
M30	31	70	7	9.2	8	168.92
M33	34	76	7.5	10	8.5	213.52
M36	37.2	83	8	10.5	9.2	271.39
M42	43.5	96	8.5	12	10.5	383.61
M48	49.5	110	9	12.5	11	535.18
M56	58	128	9.5	13.5	12	762.21
M64	66	136	10	14	12.8	871.34
M72	74	145	10.5	15	13	1006.08
M90	92.5	160	11	16	14	1155.31
M100	102.5	180	11.5	17	15	1551.52
M125	128	220	12	19	16.5	2367.49

DIN6798A 外锯齿锁紧垫圈尺寸表
DIN6798A External Serrated Lock Washer

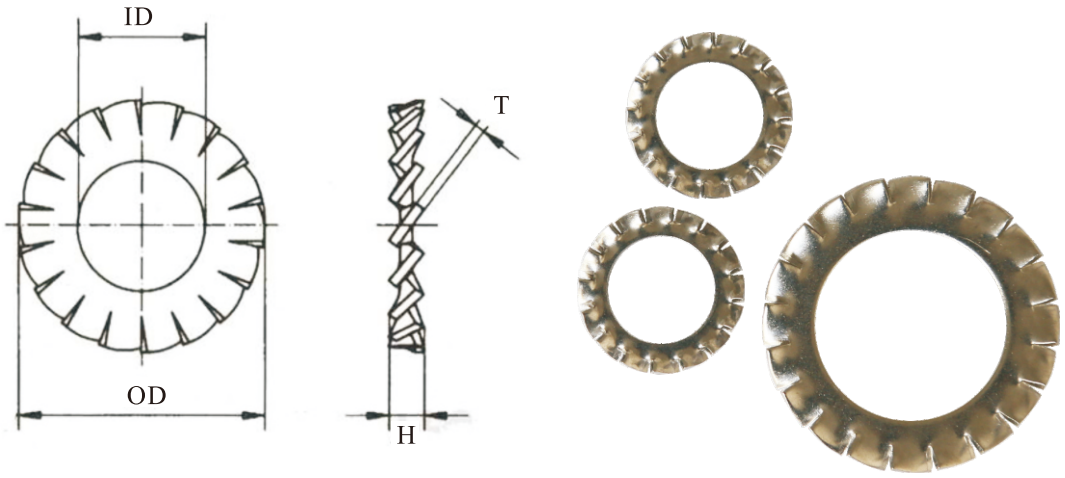

规格	ID H13	OD h14	厚度 T	H min	齿数 min
M1.6	1.7	3.6	0.3		9
M1.8	2	4	0.3		9
M2	2.2	4.5	0.3		9
M2.2	2.4	5	0.4		9
M2.5	2.7	5.5	0.4		9
M3	3.2	6	0.4		9
M3.5	3.7	7	0.5		10
M4	4.3	8	0.5		11
M5	5.3	10	0.6		11
M6	6.4	11	0.7		12
M7	7.4	12.5	0.8		14
M8	8.4	15	0.8		14
M10	10.5	18	0.9	3h	16
M12	13	20.5	1		16
M14	15	24	1		18
M16	17	26	1.2		18
M18	19	30	1.4		18
M20	21	33	1.4		20
M22	23	36	1.5		20
M24	25	38	1.5		20
M27	28	44	1.6		22
30	31	48	1.6		22

DIN6797J 内齿锁紧垫圈尺寸表
DIN6797J Internal Teeth Washer

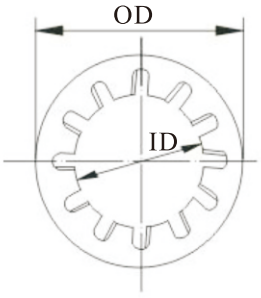





规格	ID H13	OD h14	T	H min	齿数
M1.6	1.7	3.6	0.3	2h	6
M1.8	2	4	0.3		
M2	2.2	4.5	0.3		
M2.2	2.4	5	0.4		
M2.5	2.7	5.5	0.4		
M3	3.2	6	0.4		
M3.5	3.7	7	0.5		
M4	4.3	8	0.5		
M5	5.3	10	0.6	2h	8
M6	6.4	11	0.7		
M7	7.4	12.5	0.8		
M8	8.4	15	0.8		
M10	10.5	18	0.9	2h	9
M12	13	20.5	1	2h	10
M14	15	24	1		
M16	17	26	1.2	2h	12
M18	19	30	1.4		
M20	21	33	1.4		
M22	23	36	1.5	2h	14
M24	25	38	1.5		
M27	28	44	1.6		
30	31	48	1.6		

非定制型产品-非标件
Custom-made products-non-standard parts












